Design upgrade for the hybrid glulam-steel roof structure of the sports hall for the new High School in Graçanica

Bledian Nela[1], Francesco Rucci[1]

[1] MSc Civil Engineer; Independent Researcher; Bajram Kelmendi no.5; 10 000 Prishtina; Kosovo; blediannela@gmail.com
[2] PhD Civil Engineer; Independent Researcher; Via Romano Caló; 84 0-0139 Rome; Italy; francesco.rucci.mail@gmail.com

Abstract. This paper presents the design upgrade of the roof structure for a sports hall which consists of coupled glulam beams with steel substructure. The initial design has foreseen main glulam beams which are coupled with steel trusses and strengthened with rigid steel bars over the entire length. Due to some construction issues and design misinterpretation, the as-built structure did not follow completely the design and reinforcement rebars have been used instead of steel bars intended to be acting as steel ties. A design upgrade was required to preserve the main structure of the roof established with glulam beams, purlins and all the necessary layers to create a flat roof deck for students' access. The main challenge of the new design was to preserve the glulam beams and the initial architecture for the roof structure while ensuring safety for both the ultimate and serviceability loading cases. Initially, four proposals are provided with different solutions and among them only two are chosen for the further assessment based on safety, cost estimation, feasibility and ease of implementation in order to avoid problems on site. One of the proposals consists of steel cables anchored at both ends and deviated on each steel truss and the other proposal consists of stainless-steel rods connected at each intersection with the steel trusses. After careful and detailed assessment of the two proposals, the second proposal consisting of steel rods was chosen as the most appropriate one in terms of safety, cost, feasibility and ease for construction. Additional assessment, detailing, specifications and test procedure, are given to ensure an effective structural solution for a practical problem on an existing structure.

Keywords: GLT structures, numerical modelling, steel rods, hybrid structures, strengthening

1 Introduction

To accommodate the needs of the Graçanica municipality a new High School is financed by the European Union Office in Prishtina. The school construction was awarded to a local contractor to complete the works according to the tender dossier

including the detailed design and the accompanying documentation. Some difficulties were faced during construction and the need for a redesign emerged. The part of the building that was facing difficulties was the roof structure of the newly designed and partially constructed sports hall. This roof structure is composed of glulam timber beams that span over an 18 meter sports hall and are coupled in-between with steel frames in the form of trapezoids. As per design, these steel frames require some steel ties or steel rods to hold them together and resist the tensile forces arising from the significant span. On the contrary, the as-built structure is misinterpreted and instead of steel bars or ties, in some opened holes into the steel frames, diameter ϕ32 mm reinforcement bars are placed instead. The understructure was not working properly due to this flaw in construction. Schools are always considered of high importance and that is why the safety of the structure raised immediate concern to the responsible authority, especially since the roof is designed to be opened to students which then lead to the need for a redesign.

The coupled beams of the sports hall conceptually present a spatial problem of the typical hybrid glulam-steel structure, where the glulam timber beams resist compression and the deviated steel structure (steel rod or tie) resists tension. The as-built situation of the roof is shown in Fig. 1, where seen from below in (a) can be observed the glulam-steel coupled beams and in (b) and (c) can be noted the reinforcement not resisting any force and misaligned. Another concerning issue was noted in Fig. 1 (d), where due to the insufficiency of the supporting length crushing of the glulam timber beam could occur due to increase in stresses normal to fibers.

Fig. 1. As-built structure of the roof.

After a topographical survey on site, actual deflections from the self-weight and the supporting length of the beams were recorded, shown in Fig. 2. The glulam beams before placements are pre-cambered with 10 cm and that is why the deflection in Fig. 2 (b) is shown relevant to this uplift. Another important issue was regarding the strength class of the glulam beams and the structural steel provided for the roof structure. The material strength class of the as-designed glulam beams and steel was GL36h and S300, respectively, whereas the as-built structure comprises GL24h and S235 for the glulam beams and structural steel, respectively.

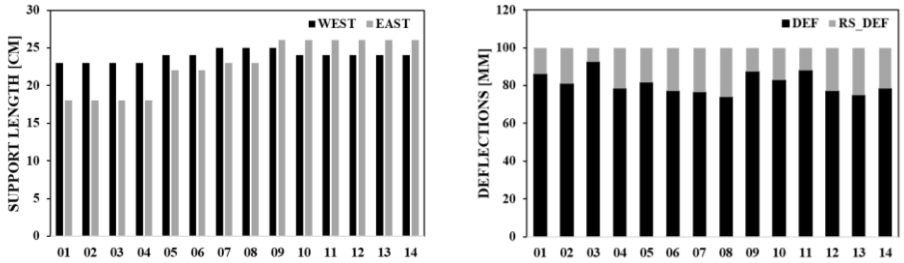

(a) (b)

Fig. 2. On site measurements of (a) support length and (b) deflections.

2 Conceptual Design

The conceptual design is initiated with some constraints from the EU Office regarding the preservation of the as-designed architecture. This required a detailed assessment and description of the as-built roof structure. The steel frames are bolted through a connection plate with 4 M16 bolts of class 8.8 to the glulam beams which were verified to be safe according to [1]. Purlins are simply supported on the main beams through a steel plate in the form of a saddle and secured with 2 bolts on each side. A delicate matter of the structure are the actual steel frames that couple the beams since they are only 3 mm thick in their cross-section and that provides a weakness for an 18 m spanned structure. However, this matter is later attended in the detailed design.

Following all the available information and details from the as-built and the details of the previous design, 4 proposals were given for the solution of the problem on site, shown in Fig. 3. In (a) is proposed a linear truss which is composed of the typical upper glulam beam and a deviated steel tie underneath to accommodate the tensile forces arising from the significant bending moment. In contrast, in (b) is proposed a space truss by replacing all the existing steel frames and in (c) is given a solution to replace only the reinforcement rebars with steel rods connected at each intersecting joint. Finally in (d), is proposed to replace the reinforcement rebars with a steel cable which is anchored at both ends and is tensioned to undertake the forces. Since the two first proposals in (a) and (b) are not in compliance with the constraint to preserve the architecture, they are not considered at all leaving only the ones in (c) and (d) for further detailed assessment.

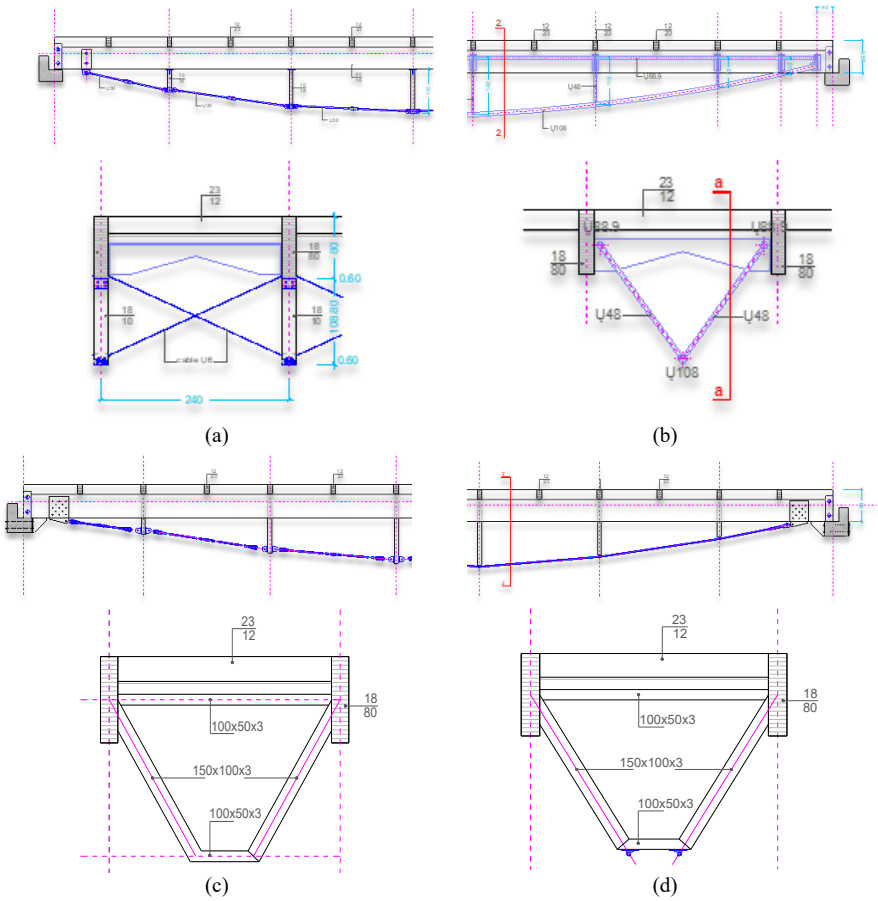

Fig. 3. Proposals for the redesign of the roof structure: (a) Proposal 1 – Linear Steel Rods, (b) Proposal 2 – Space Steel Truss, (c) Proposal 3 – Space Steel Rods, (d) Space Steel Cables.

3 Detailed Analyses

Detailed analysis involves a thorough load analysis acting on the roof, including the dead, live, snow and wind loads and the seismic action. The dead load is divided into the actual loads acting on the roof on the time of assessment and the rest of the dead loads foreseen. The actual dead loads are computed utilizing reverse engineering from the deflections measured on site, where inversely from deflections is achieved the state of stresses in the glulam beams as per [2] (at this time solely supporting the acting loads on the roof) and then computed the loads. The live loads, snow loads and wind loads are computed utilizing the provisions from [3, 4, 5], given the site conditions and are generally simpler as a procedure. Seismic action on the other hand is quite complex for this situation, since the roof structure is an integral part of the

school. However, to tackle this issue a simplified procedure is decided since the roof is light relative to the rest of the structure and for safety reasons higher seismic loads are taken into consideration. The seismic action is computed as the base shear force from the simplified procedure given in [6], and then applied as a horizontal load to the roof as a function of mass percentage relative to the rest of the structure. The acquired loads are applied to a three dimensional model of the entire roof in a couple of FEM software (for software validation) for structural analysis and the most solicited coupled beams are identified to be used for further more detailed assessment. The detailed assessment followed the numerical analysis in two separate proposed scenarios for the strengthening of the existing structure. Proposal 3 as shown in Fig. 3, is modelled using beam type finite elements and adding nonlinearity on the behavior of the steel rods which are hinged at both ends, forming the joints. Proposal 4 in Fig. 3, is also modelled using beam type finite elements that run all along the structure connected together and with reduced elastic modulus to adapt for the behavior of the cable. Cables in this case are assumed to be stretched considering the tensioned final configuration. The input parameters and the most relevant results obtained are given in Table 1. The cross sectional diameter for the steel rods/cables is taken into account based on the data from several manufacturers and the same goes for the elastic modulus with their respective strength classes for the steel rods/cables.

Table 1. Relevant results for the selected proposals.

	Proposal 3 – Steel Rods	**Proposal 4 – Steel Cables**
$\mathbf{E_{steel}}$	210 GPa	160 ± 10 GPa
Ø	36 mm	32 mm
Type	Hot galvanized steel S500 f_y = 500 MPa; f_u = 700 MPa	High-tensile non alloy steel strand f_y = 1680 MPa
Util. factor	72 %	42 %
$\mathbf{M_{GL*}}$	167.61 kNm	249.04 kNm
$\mathbf{N_{GL*}}$	-303.33 kN	-240.67 kN
$\mathbf{N_{steel}}$	327.63 kN	259.29 kN

*GL – result on glulam;

Loading and numerical analysis are performed based on stage analysis to consider the dead loads which are pre-existing on the glulam beams. The additional loads are added through nonlinear staged analysis starting from the deformed structure under self-weight and the existing layers on top. The difference in elastic moduli (Table 1) is reflected in the different results for both proposals where the bending moment in the steel cables solution is much higher compared to the one with steel rods. This resulted in an increased normal force on the steel rods and thus an increased utilization factor of the same, whereas the normal force in the steel cables is significantly lower and considering a very high strength for the steel cables the utilization factor is very low. In other words the steel rods provide a better structural functionality for the coupled beams. This was also manifested on the steel frames that couple the glulam beams, for which the decrease of force in the cables results in higher stresses subjected in the same. Regarding the cable solution another verification was demanded to be performed in order to ensure that during the

tensioning, no harm is inflicted to the existing structure. To verify the tensioning of external deviated cables the provisions from [7] are respected and the final pre-stressing force (P) after the losses is computed through the following expression. The sum of the angular displacements (α) is computed by the software, the coefficient of friction (μ) for external cables is localized only on the deviator and ranges between (0.25-0.30), whereas the wobble coefficient (k) is taken as null.

$$P = P_0 \, e^{-\mu(\alpha+kx)} \quad \textbf{(1)}$$

Considering all the results and after a very detailed cost analysis based on the construction methodology for each proposal, a final decision was made for the utilization of steel rods instead of steel cables.

4 Joint Strengthening

Globally the structural issues on the roof are easily solved and also construction imperfections can be neglected on the overall behavior. Complexity and concern arises on the micro assessment of the joint connection for the steel rods which have to be installed on site and on an existing structure that cannot be dismantled. It is impossible to avoid misalignments and deviation of axis in all three dimensions for the joint connections of the rods. Adding the construction implications and site conditions this becomes an enormous problem. As it was mentioned earlier the steel frames coupling the glulam beams are made of 3 mm thick profiles and as such present an issue when it comes to transmitting huge amount of forces and therefore stresses and strains. Several trials were conducted, which also involved a lot of proposals to strengthen the joint and achieve compliance with the codes, but the cheapest and the easiest solution in means of construction is the one shown in Fig. 4.

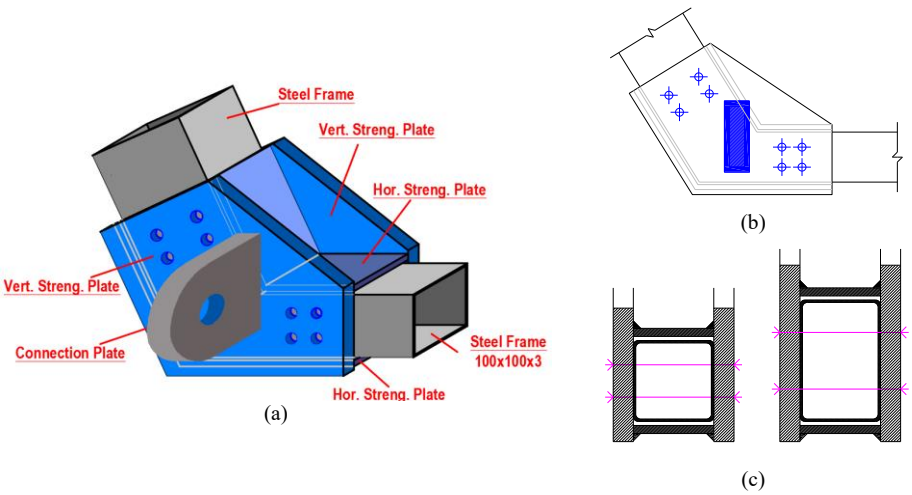

Fig. 4. Axonometric view (a), Front view (b) and cross-section (c) of the strengthened joint.

Numerical stress analysis of the joint included a lot of factors to be taken into account which yielded in a numerous advanced steel plastic analysis that are out of the scope of this paper. Nonetheless, the final most important analysis included the stress and strain check of the vertical strengthening plates (refer to Fig. 4). Since localized stresses rise from the connection plate, it is impossible to achieve verification inside the yield domain of steel (elastic domain) so the structural check is achieved in the plastic domain which is verified according to the provisions given in [8]. These provisions allow stress redistribution and limit the plastic strains to a certain limit of ε_{pl}=5%. The Von Mises stresses after redistribution (a) and the plastic strains (b) are shown in Fig. 5. It must be noted that the results are shown in a limited range of values where the minimal Von Mises stress shown is the maximum yield stress and as such everything lower than this is lost in graphical representation since it is not of interest. Similarly is done with the corresponding strains.

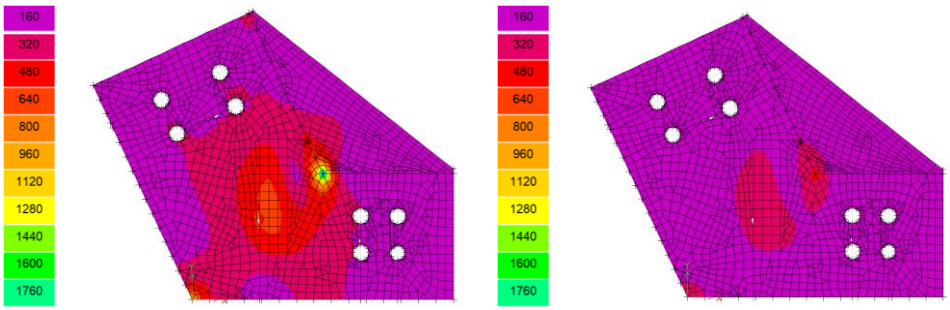

(a) (b)

Fig. 5. Von Mises stresses in MPa (a) and Von Mises strains in % (b).

5 Loading Test

Instead of conclusions, in order to ensure the safety and the functionality of the proposed solution for the structure a loading test is required and hereby presented. In this case the terms of reference for the tests are prepared following several guidelines [9, 10, 11], in absence of specific timber norms for loading tests, under which they shall be conducted to ensure proper assessment of the structure. The testing shall be conducted using a water pool on top of the most solicited coupled beams according to design, as it is easier to fill, drain and control the load level on the roof. Loading and unloading for the test shall follow a protocol (Fig. 6) under which are given the provisions of performance. The maximum load of 3.00 kN/m^2 corresponds to 30 cm of water in the water pool.

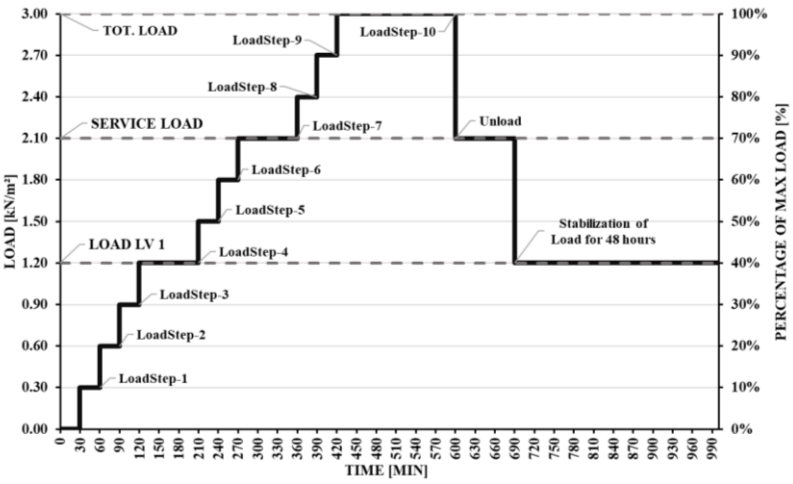

Fig. 6. Loading Test Protocol.

To capture all the necessary measurements a scheme for the location of the equipment is given in Fig. 7. LVDTs and strain gauges are required in such a way as to correlate results obtained in different directions and if taken directly may lead to mistakes.

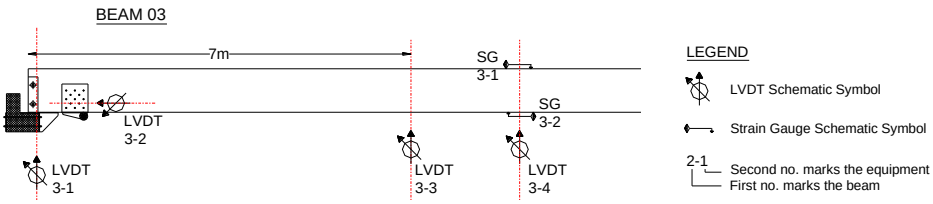

Fig. 7. Schematic localization of LVDTs and Strain gauges for the beams.

Methodology requires the measurement of the maximum deflection of the beams under the maximum load and then after the stabilization of loads for around 48 hours, residual deflections are measured. Comparing the two deflections provides the acceptance criteria and the level of safety for the structure. While residual deflections ($\Delta_{res,max}$) are less than 25% of the total maximum deflection ($\delta_{max,100}$), this criteria is achieved and the structure is safe concerning the service loads.

References

1. BSI: EN 1993-1-8:2005: *Eurocode 3: Design of steel structures – Part 1-8: Design of joints.* British Standards Institution. (2005)

2. BSI: EN 1995-1-1:2004: *Eurocode 5: Design of timber structures – Part 1-1: General – Common rules and rules for buildings.* British Standards Institution. (2004)
3. BSI: EN 1991-1-1:2002: *Eurocode 1: Actions on structures – Part 1-1: General actions – Densities, self-weight, imposed loads for buildings.* British Standards Institution. (2002)
4. BSI: EN 1991-1-3:2003: *Eurocode 1: Actions on structures – Part 1-3: General actions – Snow loads.* British Standards Institution. (2003)
5. BSI: EN 1991-1-4:2005: *Eurocode 1: Actions on structures – Part 1-4: General actions – Wind actions.* British Standards Institution. (2005)
6. BSI: EN 1998-1-1:2004: *Eurocode 8: Design of structures for earthquake resistance – Part 1: General rules, seismic actions and rules for buildings.* British Standards Institution. (2004)
7. CEB-FIB: *Model Code for Concrete Structures 2010*. International Federation for Structural Concrete. (2010)
8. BSI: EN 1993-1-5:2006: *Eurocode 3: Design of steel structures – Part 1-5: Plated structural elements.* British Standards Institution. (2006)
9. Ministerio de Fomento: *Recomendaciones para la realización de pruebas de carga de recepción én puentes de carretera.* Ministerio de Fomento – Dirección de Carreteras. (1999)
10. ASTM: E 196-06: *Standard Practice for Gravity Load Testing on Floors and Low Slope Roofs.* American Society for Testing and Materials. (2006)
11. ACI: 437.1 R-07: *Load Tests of Concrete Structures: Methods, Magnitude, Protocols, and Acceptance Criteria.* American Concrete Institute – ACI Committee 437. (2007)